TSH80, TSH81, TSH82, TSH84

Wide-band rail-to-rail operational amplifiers with standby function

Datasheet - production data

Features

- Operating range from 4.5 to 12 V
- 3 dB-bandwidth: 100 MHz
- Slew rate 100 V/µs
- Output current up to 55 mA
- Input single supply voltage
- Output rail-to-rail
- Specified for 150 Ω loads
- Low distortion, THD 0.1%
- SOT23-5, SO8, and TSSOP packages
- Automotive qualification

Applications

- Video buffers
- A/D converter drivers
- Hi-fi applications

Description

The TSH8x series offers single, dual and quad operational amplifiers featuring high video performance with large bandwidth, low distortion and excellent supply voltage rejection. These amplifiers also feature large output voltage swings and a high output current capability to drive standard 150 Ω loads.

Running at single or dual supply voltages ranging from 4.5 to 12 V, these amplifiers are tested at 5 V (±2.5 V) and 10 V (±5 V) supplies.

The TSH81 device also features a standby mode, which provides the operational amplifier with a low power consumption and high output impedance. This function allows power saving or signal switching/multiplexing for high-speed and video applications.

For board space and weight saving, the TSH8x series is proposed in SOT23-5, SO8, TSSOP8, and TSSOP14 plastic micropackages.

This is information on a product in full production. www.st.com

Contents

1 Package pin connections 5

2 Absolute maximum ratings and operating conditions 6

3 Electrical characteristics 7

4 Test conditions 19

4.1 Layout precautions 19

4.2 Video capabilities 20

5 Precautions on asymmetrical supply operation 22

6 Package information 23

6.1 SOT23-5 package information 24

6.2 SO8 package information 25

6.3 TSSOP8 package information 26

6.4 TSSOP14 package information 27

7 Ordering information 28

8 Revision history 29

List of tables

Table 1. Absolute maximum ratings . . . 6
Table 2. Operating conditions . . . 6
Table 3. Electrical characteristics at V_{CC}+ = +5 V, V_{CC}- = GND, V_{ic} = 2.5 V, T_{amb} = 25 °C (unless otherwise specified) . . . 7
Table 4. Electrical characteristics at V_{CC}+ = +5 V, V_{CC}- = -5 V, V_{ic} = GND, T_{amb} = 25 °C (unless otherwise specified) . . . 10
Table 5. Standby mode - V_{CC}+, V_{CC}-, T_{amb} = 25 °C (unless otherwise specified) . . . 12
Table 6. TSH81 standby control pin status . . . 12
Table 7. Video results . . . 21
Table 8. SOT23-5 package mechanical data . . . 24
Table 9. SO8 package mechanical data . . . 25
Table 10. TSSOP8 package mechanical data . . . 26
Table 11. TSSOP14 package mechanical data . . . 27
Table 12. Order codes . . . 28
Table 13. Document revision history . . . 29

List of figures

Figure 1. Pin connections for each package (top view) . . . 5
Figure 2. Closed loop gain and phase vs. frequency (gain = +2, V_{CC} = ±2.5 V) . . . 13
Figure 3. Overshoot vs. output capacitance (V_{CC} = ±2.5 V) . . . 13
Figure 4. Closed loop gain and phase vs. frequency (gain = -10, V_{CC} = ±2.5 V) . . . 13
Figure 5. Closed loop gain and phase vs. frequency (gain = +11, V_{CC} = ±2.5 V) . . . 13
Figure 6. Large signal measurement – positive slew rate (V_{CC} = ±2.5 V) . . . 13
Figure 7. Large signal measurement – negative slew rate (V_{CC} = ±2.5 V) . . . 13
Figure 8. Small signal measurement – rise time (V_{CC} = ±2.5 V) . . . 14
Figure 9. Small signal measurement – fall time (V_{CC} = ±2.5 V) . . . 14
Figure 10. Channel separation (crosstalk) vs. frequency schematic (V_{CC} = ±2.5 V) . . . 14
Figure 11. Channel separation (crosstalk) vs. frequency (V_{CC} = ±2.5 V) . . . 14
Figure 12. Equivalent input noise voltage (V_{CC} = ±2.5 V) . . . 14
Figure 13. Maximum output swing (V_{CC} = ±2.5 V) . . . 14
Figure 16. Group delay (V_{CC} = ±2.5 V) . . . 15
Figure 14. Standby mode - T_{on}, T_{off} (V_{CC} = ±2.5 V) . . . 15
Figure 15. Third order intermodulation (V_{CC} = ±2.5 V) . . . 15
Figure 17. Closed loop gain and phase vs. frequency (gain = +2, V_{CC} = ±5 V) . . . 16
Figure 18. Overshoot vs. output capacitance (V_{CC} = ±5 V) . . . 16
Figure 19. Closed loop gain and phase vs. frequency (gain = -10, V_{CC} = ±5 V) . . . 16
Figure 20. Closed loop gain and phase vs. frequency (gain = +11, V_{CC} = ±5 V) . . . 16
Figure 21. Large signal measurement - positive slew rate (V_{CC} = ±5 V) . . . 16
Figure 22. Large signal measurement - negative slew rate (V_{CC} = ±5 V) . . . 16
Figure 23. Small signal measurement - rise time (V_{CC} = ±5 V) . . . 17
Figure 24. Small signal measurement - fall time (V_{CC} = ±5 V) . . . 17
Figure 25. Channel separation (crosstalk) vs. frequency schematic (V_{CC} = ±5 V) . . . 17
Figure 26. Channel separation (crosstalk) vs. frequency (V_{CC} = ±5 V) . . . 17
Figure 27. Equivalent input noise voltage (V_{CC} = ±5 V) . . . 17
Figure 28. Maximum output swing (V_{CC} = ±5 V) . . . 17
Figure 31. Group delay (V_{CC} = ±5 V) . . . 18
Figure 29. Standby mode - T_{on}, T_{off} (V_{CC} = ±5 V) . . . 18
Figure 30. Third order intermodulation (V_{CC} = ±5 V) . . . 18
Figure 32. CCIR330 video line . . . 19
Figure 33. Measurement on Rohde and Schwarz VSA . . . 20
Figure 34. Asymmetrical supply schematic diagram . . . 22
Figure 35. Use of the TSH8x in a gain = -1 configuration . . . 22
Figure 36. SOT23-5 package outline . . . 24
Figure 37. SO8 package outline . . . 25
Figure 38. TSSOP8 package outline . . . 26
Figure 39. TSSOP14 package outline . . . 27

1 Package pin connections

Figure 1. Pin connections for each package (top view)

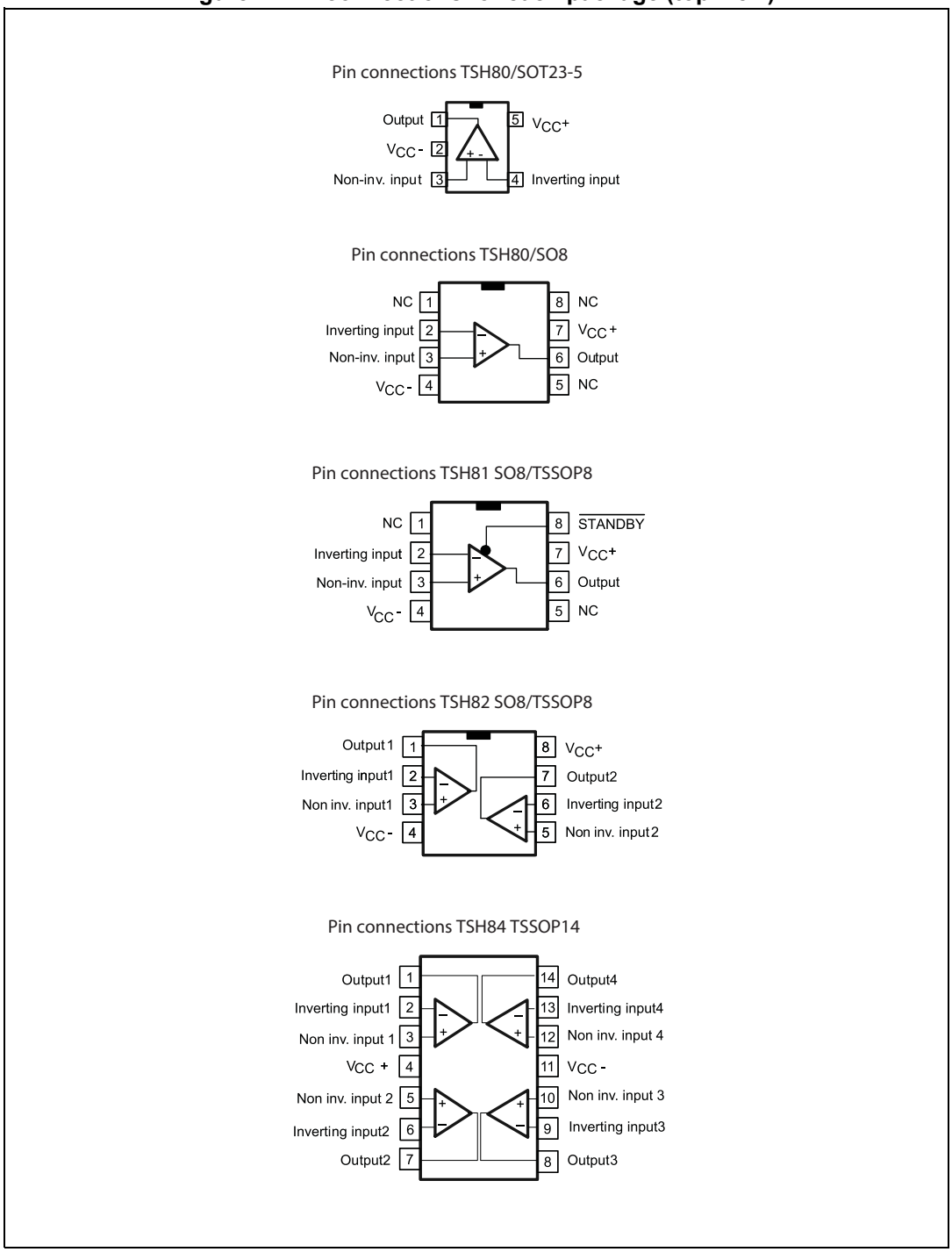

2 Absolute maximum ratings and operating conditions

Table 1. Absolute maximum ratings

Symbol	Parameter	Value	Unit
V_{CC}	Supply voltage(1)	14	V
V_{id}	Differential input voltage(2)	±2	
V_i	Input voltage(3)	±6	
T_{oper}	Operating free air temperature range	-40 to +85	°C
T_{stg}	Storage temperature	-65 to +150	
T_j	Maximum junction temperature	150	
R_{thjc}	Thermal resistance junction-to-case(4) SOT23-5 SO8 TSSOP8 TSSOP14	 80 28 37 32	°C/W
R_{thja}	Thermal resistance junction-to-ambient area SOT23-5 SO8 TSSOP8 TSSOP14	 250 157 130 110	
ESD	HBM: human body model(5) MM: machine model(6) CDM: charged device model(7)	2 0.2 1.5	kV

1. All voltage values, except differential voltage are with respect to the network ground terminal.
2. The differential voltage is the non inverting input terminal with respect to the inverting terminal.
3. The magnitude of input and output must never exceed V_{CC} +0.3 V.
4. Short-circuits can cause excessive heating.
5. Human body model: a 100 pF capacitor is charged to the specified voltage, then discharged through a 1.5 kΩ resistor between two pins of the device. This is done for all couples of connected pin combinations while the other pins are floating.
6. Machine model: a 200 pF capacitor is charged to the specified voltage, then discharged directly between two pins of the device with no external series resistor (internal resistor < 5 Ω). This is done for all couples of connected pin combinations while the other pins are floating.
7. Charged device model: all pins and package are charged together to the specified voltage and then discharged directly to ground through only one pin. This is done for all pins.

Table 2. Operating conditions

Symbol	Parameter	Value	Unit
V_{CC}	Supply voltage	4.5 to 12	V
V_{IC}	Common mode input voltage range	V_{CC}^- to (V_{CC}^+ -1.1)	
Standby (pin 8)	Threshold on pin 8 for TSH81	(V_{CC}^-) to (V_{CC}^+)	

3 Electrical characteristics

Table 3. Electrical characteristics at V_{CC}^{+} = +5 V, V_{CC}^{-} = GND, V_{ic} = 2.5 V, T_{amb} = 25 °C (unless otherwise specified)

Symbol	Parameter	Test conditions	Min.	Typ.	Max.	Unit
$\|V_{io}\|$	Input offset voltage	T_{amb} = 25 °C $T_{min} < T_{amb} < T_{max}$		1.1	10 12	mV
$\Delta V_{io}/\Delta T$	Input offset voltage drift vs. temperature	$T_{min} < T_{amb} < T_{max}$		3		µV/°C
I_{io}	Input offset current	T_{amb} = 25 °C $T_{min} < T_{amb} < T_{max}$		0.1	3.5 5	µA
I_{ib}	Input bias current	T_{amb} = 25 °C $T_{min} < T_{amb} < T_{max}$		6	15 20	
C_{in}	Input capacitance			0.3		pF
I_{CC}	Supply current per operator	T_{amb} = 25 °C $T_{min} < T_{amb} < T_{max}$		8.2	10.5 11.5	mA
CMR	Common mode rejection ratio ($\Delta V_{ic}/\Delta V_{io}$)	+0.1< V_{ic}< 3.9 V and V_{out} = 2.5 V T_{amb} = 25 °C $T_{min} < T_{amb} < T_{max}$	 72 70	97		dB
SVR	Supply voltage rejection ratio ($\Delta V_{CC}/\Delta V_{io}$)	T_{amb} = 25 °C $T_{min} < T_{amb} < T_{max}$	68 65	75		
PSR	Power supply rejection ratio ($\Delta V_{CC}/\Delta V_{out}$)	Positive and negative rail		75		
A_{vd}	Large signal voltage gain	R_L = 150 Ω connected to 1.5 V and V_{out} = 1 V to 4 V T_{amb} = 25 °C $T_{min} < T_{amb} < T_{max}$	 75 70	84		
I_o	|Source|	V_{id} = +1, V_{out} connected to 1.5 V T_{amb} = 25 °C $T_{min} < T_{amb} < T_{max}$	 35 28	55		mA
	Sink	V_{id} = -1, V_{out} connected to 1.5 V T_{amb} = 25 °C $T_{min} < T_{amb} < T_{max}$	 33 28	55		

Table 3. Electrical characteristics at V_{CC}^{+} = +5 V, V_{CC}^{-} = GND, V_{ic} = 2.5 V, T_{amb} = 25 °C (unless otherwise specified) (continued)

Symbol	Parameter	Test conditions	Min.	Typ.	Max.	Unit
V_{oh}	High-level output voltage	T_{amb} = 25 °C R_L = 150 Ω connected to GND R_L = 600 Ω connected to GND R_L = 2 kΩ connected to GND R_L = 10 kΩ connected to GND R_L = 150 Ω connected to 2.5 V R_L = 600 Ω connected to 2.5 V R_L = 2 kΩ connected to 2.5 V R_L = 10 kΩ connected to 2.5 V $T_{min} < T_{amb} < T_{max}$ R_L = 150 Ω connected to GND R_L = 150 Ω connected to 2.5 V	 4.2 4.60(1) 4.5 4.1 4.4	 4.36 4.85 4.90 4.93 4.66 4.90 4.92 4.93		V
V_{ol}	Low-level output voltage	T_{amb} = 25 °C R_L = 150 Ω connected to GND R_L = 600 Ω connected to GND R_L = 2 kΩ connected to GND R_L = 10 kΩ connected to GND R_L = 150 Ω connected to 2.5 V R_L = 600 Ω connected to 2.5 V R_L = 2 kΩ connected to 2.5 V R_L = 10 kΩ connected to 2.5 V $T_{min} < T_{amb} < T_{max}$ R_L = 150 Ω connected to GND R_L = 150 Ω connected to 2.5 V		 48 54 55 56 220 105 76 61	 150 400 200 450	mV
GBP	Gain bandwidth product	F = 10 MHz A_{VCL}= +11 A_{VCL}= -10		 65 55		MHz
Bw	Bandwidth at -3 dB	A_{VCL}= +1 R_L = 150 Ω connected to 2.5 V		87		
SR	Slew rate	A_{VCL} = +2 R_L = 150 Ω // C_L to 2.5 V C_L = 5 pF C_L = 30 pF	 60	 104 105		V/ms
ϕm	Phase margin	R_L = 150 Ω // 30 pF to 2.5 V		40		Degree
en	Equivalent input noise voltage	F = 100 kHz		11		nV/√Hz
THD	Total harmonic distortion	A_{VCL}= +2, F = 4 MHz R_L = 150 Ω // 30 pF to 2.5 V V_{out} = 1V_{pp} V_{out} = 2V_{pp}		 -61 -54		dB
IM2	Second order intermodulation product	A_{VCL} = +2, V_{out} = 2 V_{pp} R_L = 150 Ω connected to 2.5 V F_{in1} = 180 kHz, F_{in2} = 280 kHz spurious measurement at 100 kHz		-76		dBc

Table 3. Electrical characteristics at V_{CC}^{+} = +5 V, V_{CC}^{-} = GND, V_{ic} = 2.5 V, T_{amb} = 25 °C (unless otherwise specified) (continued)

Symbol	Parameter	Test conditions	Min.	Typ.	Max.	Unit
IM3	Third order intermodulation product	A_{VCL} = +2, V_{out} = 2 V_{pp} R_L = 150 Ω to 2.5 V F_{in1} = 180 kHz, F_{in2} = 280 kHz spurious measurement at 400 kHz		-68		dBc
ΔG	Differential gain	A_{VCL} = +2, R_L = 150 Ω to 2.5 V F = 4.5 MHz, V_{out} = 2 V_{pp}		0.5		%
Df	Differential phase	A_{VCL} = +2, R_L = 150 Ω to 2.5 V F = 4.5 MHz, V_{out} = 2 V_{pp}		0.5		Degree
Gf	Gain flatness	F = DC to 6 MHz, A_{VCL} = +2		0.2		dB
Vo1/Vo2	Channel separation	F = 1 MHz to 10 MHz		65		

1. Tested on the TSH80ILT device only.

Table 4. Electrical characteristics at V_{CC}^{+} = +5 V, V_{CC}^{-} = -5 V, V_{ic} = GND, T_{amb} = 25 °C (unless otherwise specified)

Symbol	Parameter	Test conditions	Min.	Typ.	Max.	Unit
$\|V_{io}\|$	Input offset voltage	T_{amb} = 25 °C $T_{min} < T_{amb} < T_{max}$		0.8	10 12	mV
$\Delta V_{io}/\Delta T$	Input offset voltage drift vs. temperature	$T_{min} < T_{amb} < T_{max}$		2		µV/°C
I_{io}	Input offset current	T_{amb} = 25 °C $T_{min} < T_{amb} < T_{max}$		0.1	3.5 5	µA
I_{ib}	Input bias current	T_{amb} = 25 °C $T_{min} < T_{amb} < T_{max}$		6	15 20	
C_{in}	Input capacitance			0.7		pF
I_{CC}	Supply current per operator	T_{amb} = 25 °C $T_{min} < T_{amb} < T_{max}$		9.8	12.3 13.4	mA
CMR	Common mode rejection ratio ($\Delta V_{ic}/\Delta V_{io}$)	-4.9 < V_{ic} < 3.9 V and V_{out} = GND T_{amb} = 25 °C $T_{min} < T_{amb} < T_{max}$	 81 72	106		dB
SVR	Supply voltage rejection ratio ($\Delta V_{CC}/\Delta V_{io}$)	T_{amb} = 25 °C $T_{min} < T_{amb} < T_{max}$	71 65	77		
PSR	Power supply rejection ratio ($\Delta V_{CC}/\Delta V_{out}$)	Positive and negative rail		75		
A_{vd}	Large signal voltage gain	R_L = 150 Ω connected to GND and V_{out} = -4 to +4 T_{amb} = 25 °C $T_{min} < T_{amb} < T_{max}$	 75 70	86		
I_o	|Source|	V_{id} = +1, V_{out} connected to 1.5 V T_{amb} = 25 °C $T_{min} < T_{amb} < T_{max}$	 35 28	55		mA
	Sink	V_{id} = -1, V_{out} connected to 1.5 V T_{amb} = 25 °C $T_{min} < T_{amb} < T_{max}$	 30 28	55		
V_{oh}	High-level output voltage	T_{amb} = 25 °C R_L = 150 Ω connected to GND R_L = 600 Ω connected to GND R_L = 2 kΩ connected to GND R_L = 10 kΩ connected to GND $T_{min} < T_{amb} < T_{max}$ R_L = 150 Ω connected to GND	 4.2 4.1	 4.36 4.85 4.9 4.93		V
V_{ol}	Low-level output voltage	T_{amb} = 25 °C R_L = 150 Ω connected to GND R_L = 600 Ω connected to GND R_L = 2 kΩ connected to GND R_L = 10 kΩ connected to GND $T_{min} < T_{amb} < T_{max}$ R_L = 150 Ω connected to GND		 -4.63 -4.86 -4.9 -4.93	 -4.4 -4.3	mV

Table 4. Electrical characteristics at V_{CC}^{+} = +5 V, V_{CC}^{-} = -5 V, V_{ic} = GND, T_{amb} = 25 °C (unless otherwise specified) (continued)

Symbol	Parameter	Test conditions	Min.	Typ.	Max.	Unit
GBP	Gain bandwidth product	F = 10 MHz A_{VCL} = +11 A_{VCL} = -10		 65 55		MHz
Bw	Bandwidth at -3 dB	A_{VCL} = +1 R_L = 150 Ω // 30 pF to GND		100		
SR	Slew rate	A_{VCL} = +2 R_L = 150 Ω // C_L to GND C_L = 5 pF C_L = 30 pF	 68	 117 118		V/µs
fm	Phase margin	R_L = 150 Ω connected to GND		40		Degree
en	Equivalent input noise voltage	F = 100 kHz		11		nV/√Hz
THD	Total harmonic distortion	A_{VCL} = +2, F = 4 MHz R_L = 150 Ω // 30 pF to GND V_{out} = 1 V_{pp} V_{out} = 2 V_{pp}		 -61 -54		dB
IM2	Second order intermodulation product	A_{VCL} = +2, V_{out} = 2 V_{pp} R_L = 150 Ω to GND F_{in1} = 180 kHz, F_{in2} = 280 kHz spurious measurement at 100 kHz		-76		dBc
IM3	Third order intermodulation product	A_{VCL} = +2, V_{out} = 2 V_{pp} R_L = 150 Ω to GND F_{in1} = 180 kHz, F_{in2} = 280 kHz spurious measurement at 400 kHz		-68		
ΔG	Differential gain	A_{VCL} = +2, R_L = 150 Ω to GND F = 4.5 MHz, V_{out} = 2 V_{pp}		0.5		%
Df	Differential phase	A_{VCL} = +2, R_L = 150 Ω to GND F = 4.5 MHz, V_{out} = 2 V_{pp}		0.5		Degree
Gf	Gain flatness	F = DC to 6 MHz, A_{VCL} = +2		0.2		dB
Vo1/Vo2	Channel separation	F = 1 MHz to 10 MHz		65		

Table 5. Standby mode - V_{CC}^+, V_{CC}^-, T_{amb} = 25 °C (unless otherwise specified)

Symbol	Parameter	Test conditions	Min.	Typ.	Max.	Unit
V_{low}	Standby low level		V_{CC}^-		(V_{CC}^- +0.8)	V
V_{high}	Standby high level		(V_{CC}^- +2)		(V_{CC}^+)	
$I_{CC\text{-}STBY}$	Current consumption per operator when standby is active	Pin 8 (TSH81) to V_{CC}^-		20	55	µA
Z_{out}	Output impedance (R_{out}//C_{out})	R_{out} C_{out}		10 17		MΩ pF
T_{on}	Time from standby mode to active mode			2		µs
T_{off}	Time from active mode to standby mode	Down to $I_{CC\text{-}STBY}$ = 10 µA		10		

Table 6. TSH81 standby control pin status

TSH81 standby control pin 8 ($\overline{STANDBY}$)	Operator status
V_{low}	Standby
V_{high}	Active

Figure 2. Closed loop gain and phase vs. frequency (gain = +2, V_{CC} = ±2.5 V)

R_L = 150 Ω, T_{amb} = 25 °C

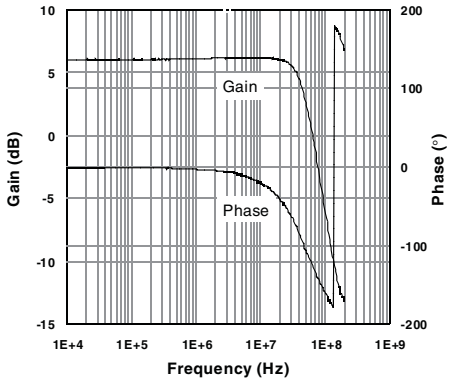

Figure 3. Overshoot vs. output capacitance (V_{CC} = ±2.5 V)

Gain = +2, T_{amb} = 25 °C

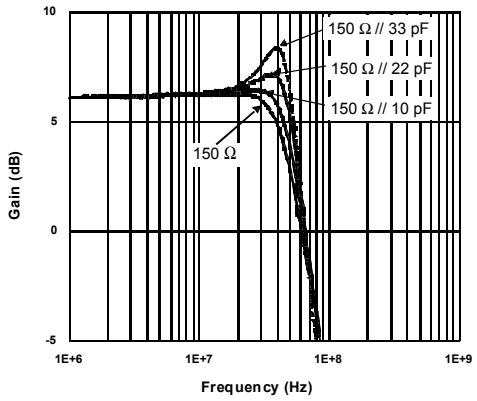

Figure 4. Closed loop gain and phase vs. frequency (gain = -10, V_{CC} = ±2.5 V)

R_L = 150 Ω, T_{amb} = 25 °C

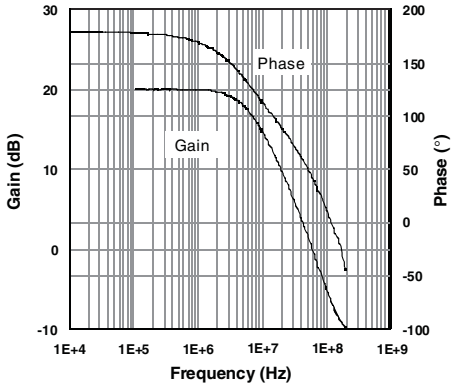

Figure 5. Closed loop gain and phase vs. frequency (gain = +11, V_{CC} = ±2.5 V)

R_L = 150 Ω, T_{amb} = 25 °C

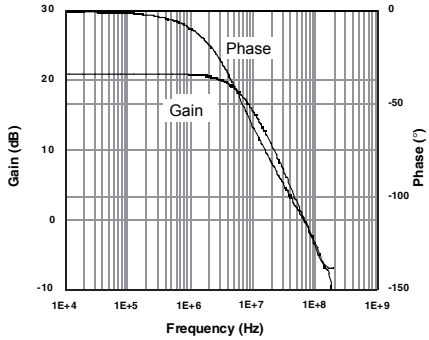

Figure 6. Large signal measurement – positive slew rate (V_{CC} = ±2.5 V)

Gain = +2, Z_L = 150 Ω//5.6 pF, V_{in} = 400 mVpk

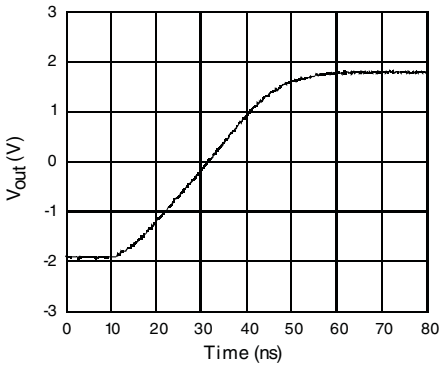

Figure 7. Large signal measurement – negative slew rate (V_{CC} = ±2.5 V)

Gain = +2, Z_L = 150 Ω//5.6 pF, V_{in} = 400 mVpk

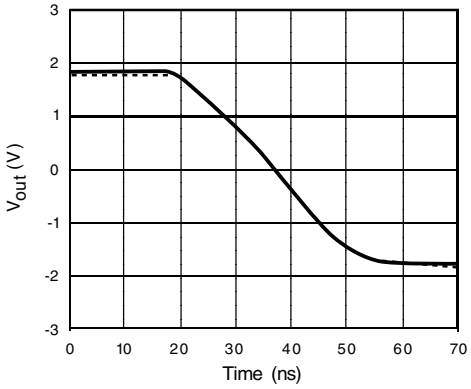

Figure 8. Small signal measurement – rise time (V_{CC} = ±2.5 V)

Gain = +2, R_L = 150 Ω, V_{in} = 400 mVpk

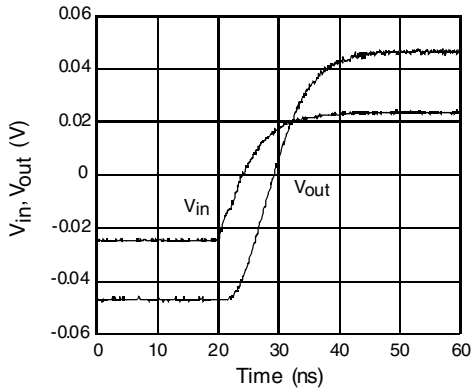

Figure 9. Small signal measurement – fall time (V_{CC} = ±2.5 V)

Gain = +2, R_L = 150 Ω, V_{in} = 400 mVpk

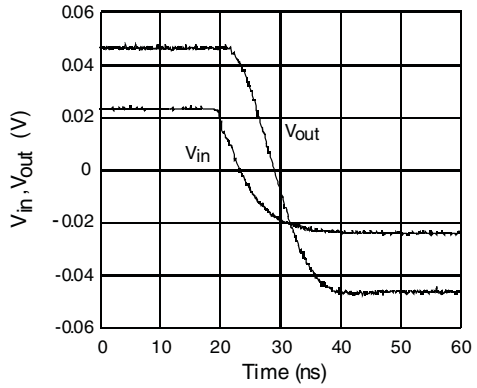

Figure 10. Channel separation (crosstalk) vs. frequency schematic (V_{CC} = ±2.5 V)

Measurement configuration: crosstalk = 20 log (V0/V1)

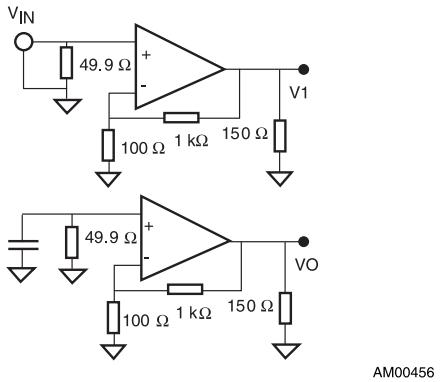

Figure 11. Channel separation (crosstalk) vs. frequency (V_{CC} = ±2.5 V)

Gain = +11, Z_L = 150 Ω//27 pF

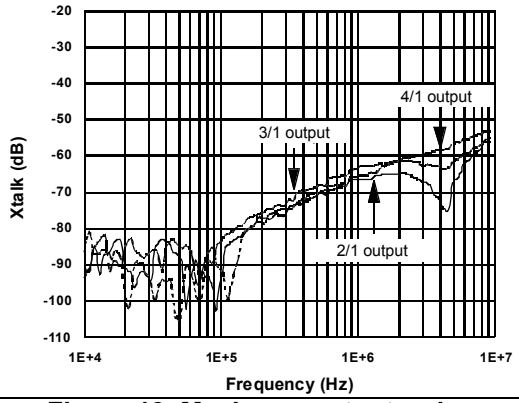

Figure 12. Equivalent input noise voltage (V_{CC} = ±2.5 V)

Gain = +100, no load

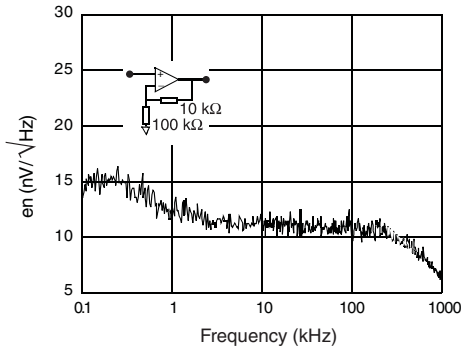

Figure 13. Maximum output swing (V_{CC} = ±2.5 V)

Gain = +11, R_L = 150 Ω

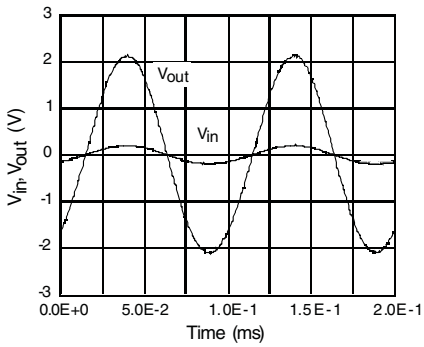

Figure 14. Standby mode - T_{on}, T_{off} (V_{CC} = ±2.5 V)

Open loop

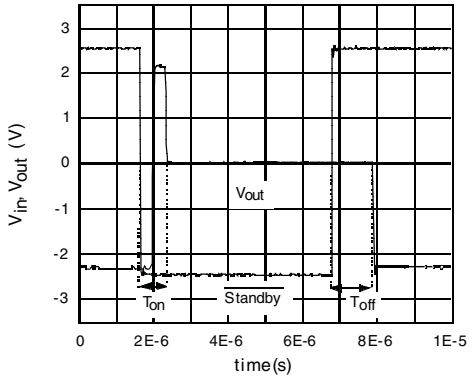

Figure 15. Third order intermodulation (V_{CC} = ±2.5 V)(1)

Gain = +2, Z_L = 150 Ω//27 pF, T_{amb} = 25 °C

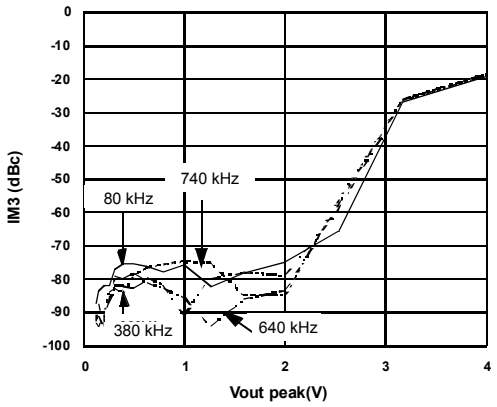

1. The IFR2026 synthesizer generates a two-tone signal (F1 = 180 kHz, F2 = 280 kHz), each tone having the same amplitude. The HP3585 spectrum analyzer measures the intermodulation products as a function of the output voltage. The generator and the spectrum analyzer are phase locked for better accuracy.

Figure 16. Group delay (V_{CC} = ±2.5 V)

Gain = +2, Z_L = 150 Ω//27 pF, T_{amb} = 25 °C

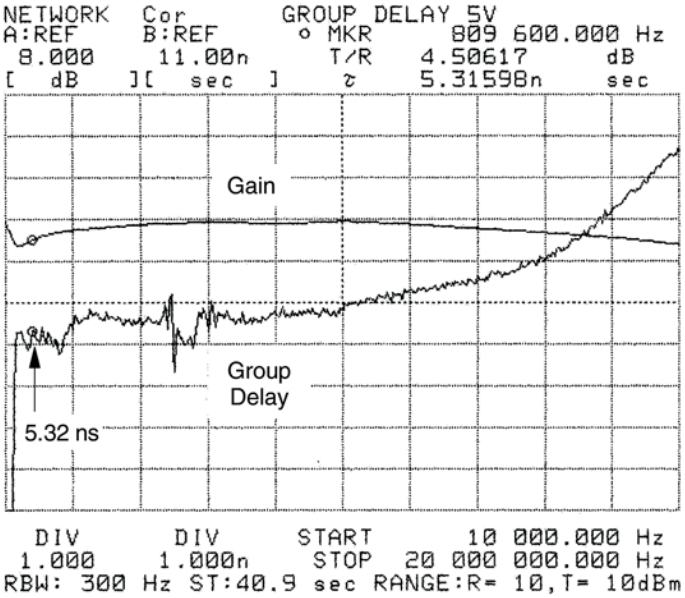

Figure 17. Closed loop gain and phase vs. frequency (gain = +2, V_{CC} = ±5 V)

R_L = 150 Ω, T_{amb} = 25 °C

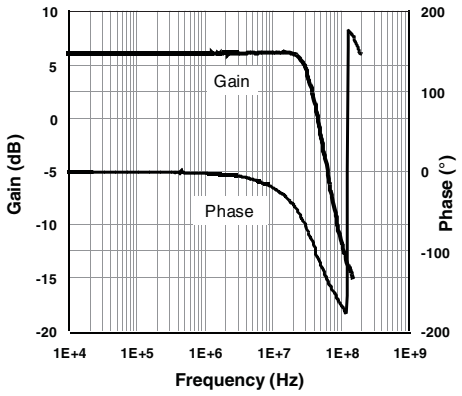

Figure 18. Overshoot vs. output capacitance (V_{CC} = ±5 V)

Gain = +2, T_{amb} = 25 °C

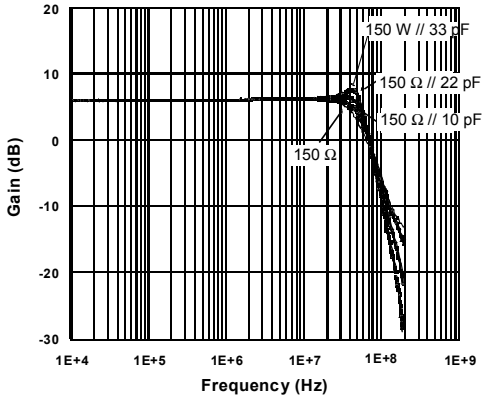

Figure 19. Closed loop gain and phase vs. frequency (gain = -10, V_{CC} = ±5 V)

R_L = 150 Ω, T_{amb} = 25 °C

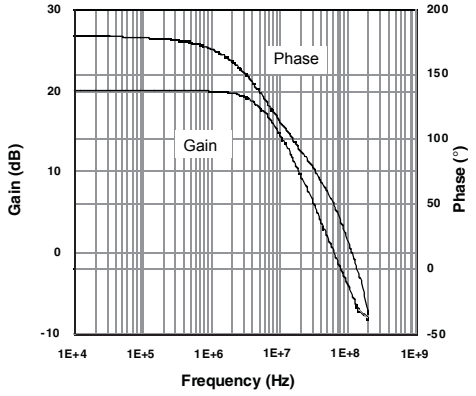

Figure 20. Closed loop gain and phase vs. frequency (gain = +11, V_{CC} = ±5 V)

R_L = 150 Ω, T_{amb} = 25 °C

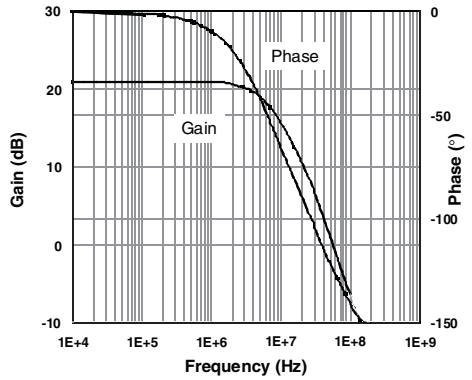

Figure 21. Large signal measurement - positive slew rate (V_{CC} = ±5 V)

Gain = +2, Z_L = 150 Ω//5.6 pF, V_{in} = 400 mVpk

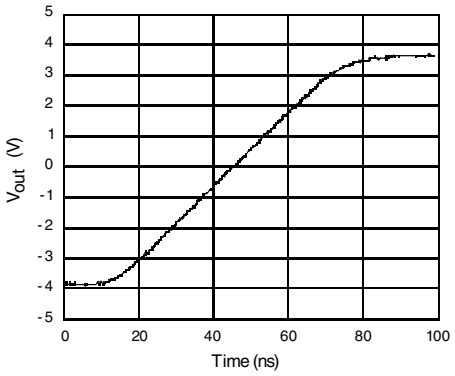

Figure 22. Large signal measurement - negative slew rate (V_{CC} = ±5 V)

Gain = +2, Z_L = 150 Ω//5.6 pF, V_{in} = 400 mVpk

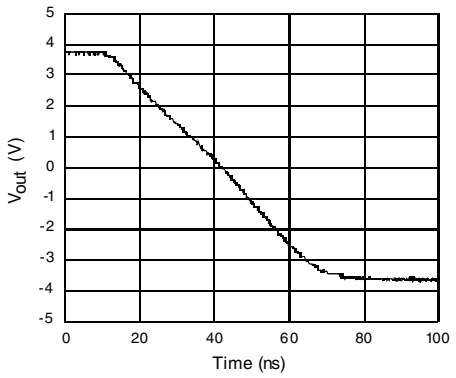

Figure 23. Small signal measurement - rise time (V_{CC} = ±5 V)

Gain = +2, R_L = 150 Ω, V_{in} = 400 mVpk

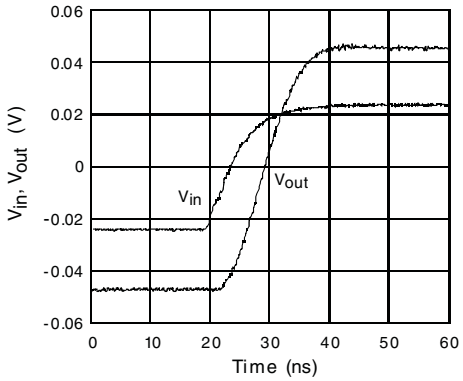

Figure 24. Small signal measurement - fall time (V_{CC} = ±5 V)

Gain = +2, R_L = 150 Ω, V_{in} = 400 mVpk

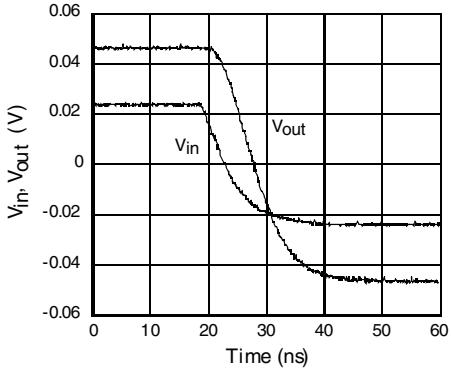

Figure 25. Channel separation (crosstalk) vs. frequency schematic (V_{CC} = ±5 V)

Measurement configuration: crosstalk = 20 log (V0/V1)

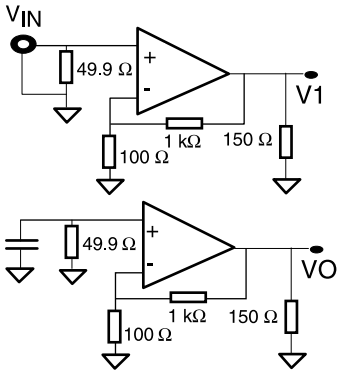

AM00458

Figure 26. Channel separation (crosstalk) vs. frequency (V_{CC} = ±5 V)

Gain = +11, Z_L = 150 Ω//27 pF

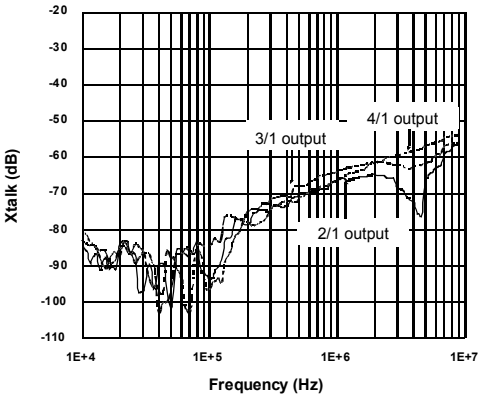

Figure 27. Equivalent input noise voltage (V_{CC} = ±5 V)

Gain = +100, no load

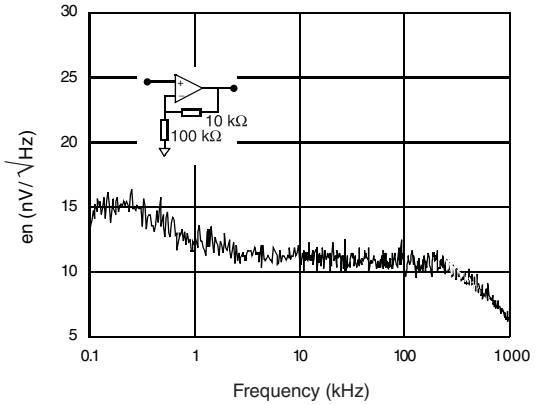

Figure 28. Maximum output swing (V_{CC} = ±5 V)

Gain = +11, R_L = 150 Ω

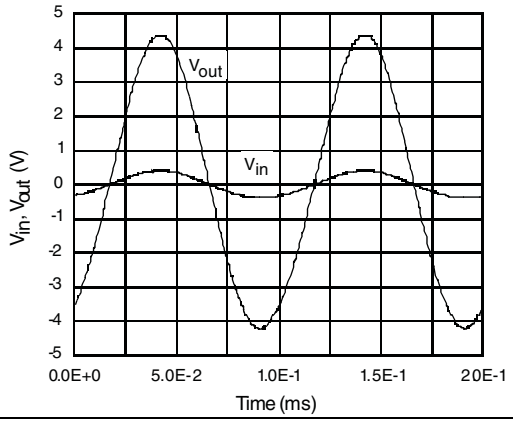

Figure 29. Standby mode - T_{on}, T_{off} (V_{CC} = ±5 V)

Open loop

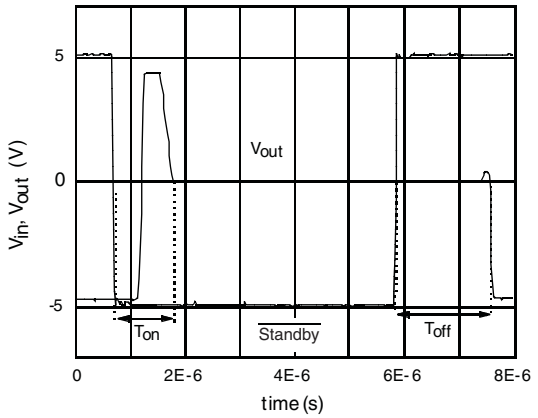

Figure 30. Third order intermodulation (V_{CC} = ±5 V)(1)

Gain = +2, Z_L = 150 Ω//27 pF, T_{amb} = 25 °C

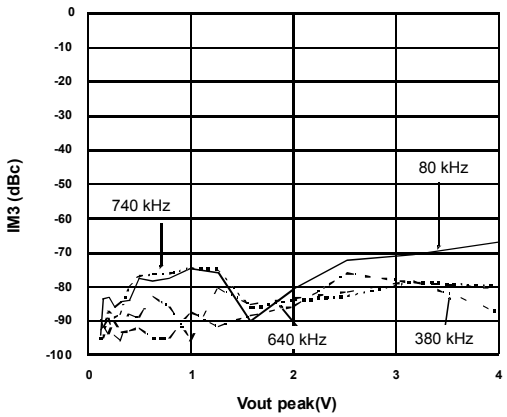

1. The IFR2026 synthesizer generates a two-tone signal (F1 = 180 kHz, F2 = 280 kHz), each tone having the same amplitude. The HP3585 spectrum analyzer measures the intermodulation products as a function of the output voltage. The generator and the spectrum analyzer are phase locked for better accuracy.

Figure 31. Group delay (V_{CC} = ±5 V)

Gain = +2, Z_L = 150 Ω//27 pF, T_{amb} = 25 °C

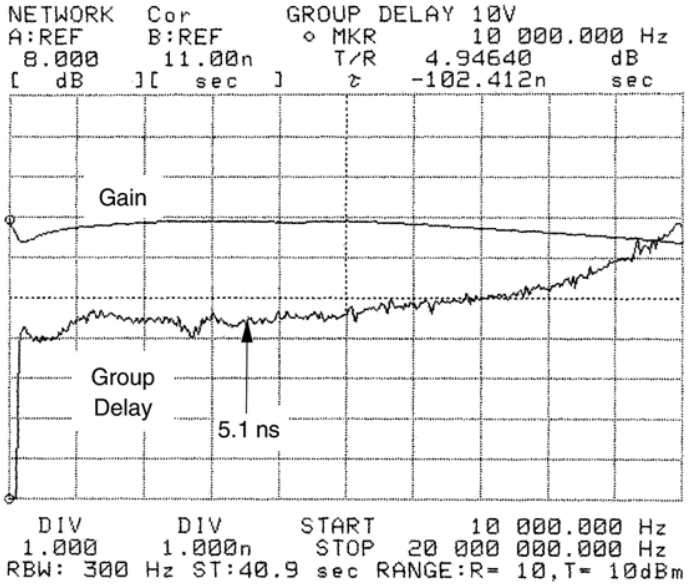

4 Test conditions

4.1 Layout precautions

To make the best use of the TSH8x circuits at high frequencies, some precautions have to be taken with regard to the power supplies.

- In high-speed circuit applications, the implementation of a proper ground plane on both sides of the PCB is mandatory to ensure low inductance and low resistance common return.
- Power supply bypass capacitors (4.7 µF and ceramic 100 pF) should be placed as close as possible to the IC pins in order to improve high frequency bypassing and reduce harmonic distortion. The power supply capacitors must be incorporated for both the negative and positive pins.
- All inputs and outputs must be properly terminated with output resistors. Thus, the amplifier load is resistive only and the stability of the amplifier is improved.
  All leads must be wide and must be as short as possible, especially for op-amp inputs and outputs, in order to decrease parasitic capacitance and inductance.
- Time constants result from parasitic capacitance. To reduce time constants in lower-gain applications, use a low feedback resistance (under 1 kΩ).
- Choose the smallest component size possible (SMD).
- On the output, the load capacitance must be negligible to maintain good stability. Place ca serial resistance as close as possible to the output pin to minimize the effect of the load capacitance.

Figure 32. CCIR330 video line

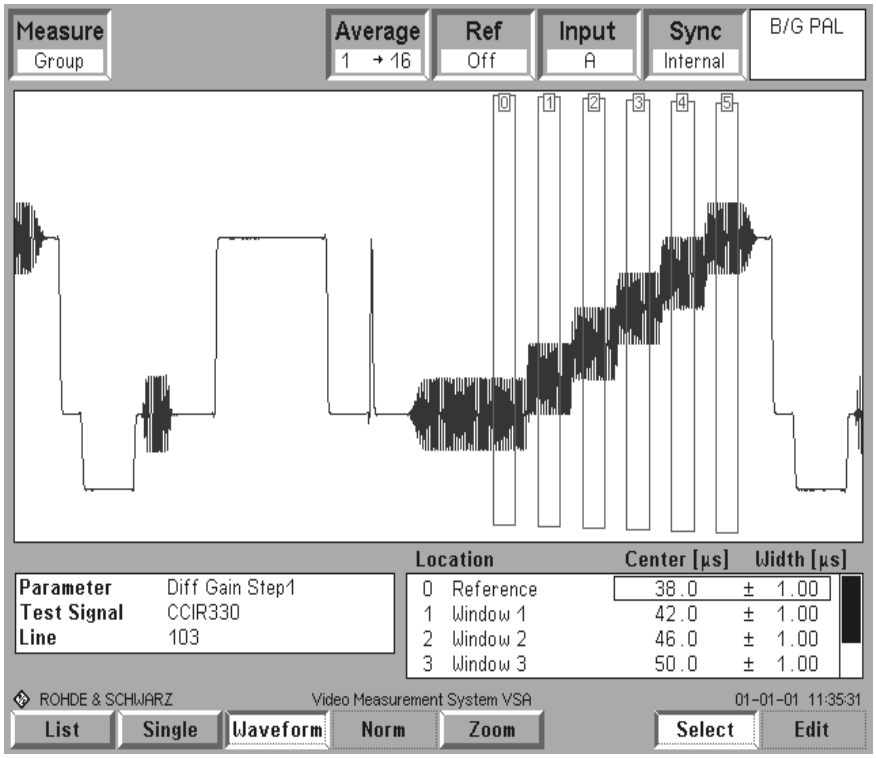

4.2 Video capabilities

To characterize the differential phase and differential gain, a CCIR330 video line is used.

The video line contains of five (flat) levels of luminance onto which the chrominance signal is superimposed. The luminance gives various amplitudes which define the saturation of the signal. The chrominance gives various phases which define the color of the signal.

Differential phase (or differential gain) distortion is present if a signal chrominance phase (gain) is affected by the luminance level. The differential phase and gain represent the ability to uniformly process the high frequency information at all luminance levels.

When a differential gain is present, color saturation is not correctly reproduced.

The input generator is the Rohde & Schwarz CCVS. The output measurement is made by the Rohde and Schwarz VSA.

Figure 33. Measurement on Rohde and Schwarz VSA

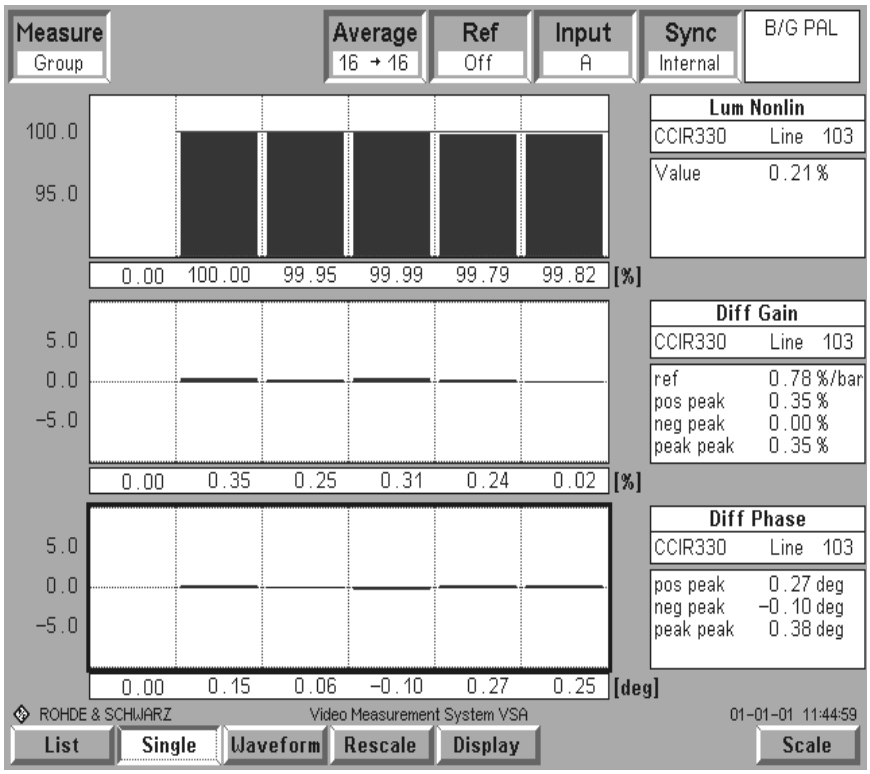

Table 7. Video results

Parameter	Value (V_{CC} = ±2.5 V)	Value (V_{CC} = ±5 V)	Unit
Lum NL	0.1	0.3	%
Lum NL Step1	100	100	
Lum NL Step2	100	99.9	
Lum NL Step3	99.9	99.8	
Lum NL Step4	99.9	99.9	
Lum NL Step5	99.9	99.7	
Diff Gain pos	0	0	
Diff Gain neg	-0.7	-0.6	
Diff Gain pp	0.7	0.6	
Diff Gain Step1	-0.5	-0.3	
Diff Gain Step2	-0.7	-0.6	
Diff Gain Step3	-0.3	-0.5	
Diff Gain Step4	-0.1	-0.3	
Diff Gain Step5	-0.4	-0.5	
Diff Phase pos	0	0.1	Degree
Diff Phase neg	-0.2	-0.4	
Diff Phase pp	0.2	0.5	
Diff Phase Step1	-0.2	-0.4	
Diff Phase Step2	-0.1	-0.4	
Diff Phase Step3	-0.1	-0.3	
Diff Phase Step4	0	0.1	
Diff Phase Step5	-0.2	-0.1	

5 Precautions on asymmetrical supply operation

The TSH8x device can be used with either a dual or a single supply. If a single supply is used, the inputs are biased to the mid-supply voltage ($+V_{CC}/2$). This bias network must be carefully designed so as to reject any noise present on the supply rail.

As the bias current is 15 µA, use a high resistance R1 (approximately 10 kΩ) to avoid introducing an offset mismatch at the amplifier's inputs.

Figure 34. Asymmetrical supply schematic diagram

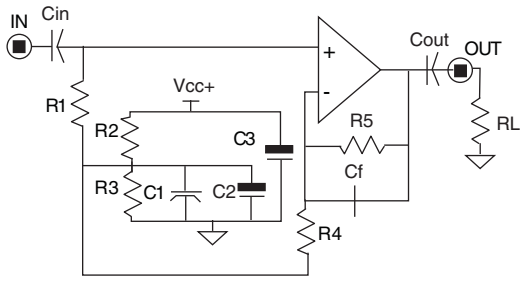

C1, C2, C3 are bypass capacitors intended to filter perturbations from V_{CC}. The following capacitor values are appropriate:

C1 = 100 nF and C2 = C3 = 100 µF

R2 and R3 are such that the current running through them must be superior to 100 times the bias current. Therefore, use the following resistance values:

R2 = R3 = 4.7 kΩ

C_{in} and C_{out} are chosen to filter the DC signal by the low-pass filters (R1, C_{in}) and (R_{out}, C_{out}). With R1 = 10 kΩ, R_{out} = R_L = 150 Ω, and C_{in} = 2 µF, C_{out} = 220 µF the cutoff frequency obtained is lower than 10 Hz.

Figure 35. Use of the TSH8x in a gain = -1 configuration

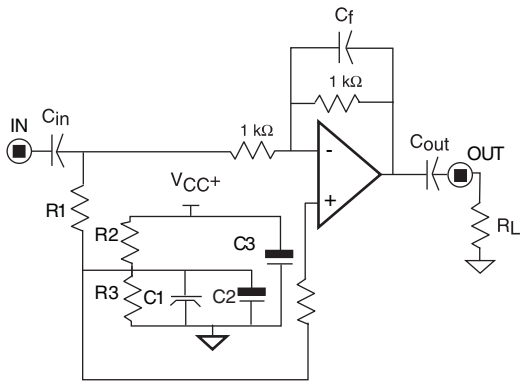

6 Package information

In order to meet environmental requirements, ST offers these devices in different grades of ECOPACK® packages, depending on their level of environmental compliance. ECOPACK specifications, grade definitions and product status are available at: *www.st.com*. ECOPACK is an ST trademark.

6.1 SOT23-5 package information

Figure 36. SOT23-5 package outline

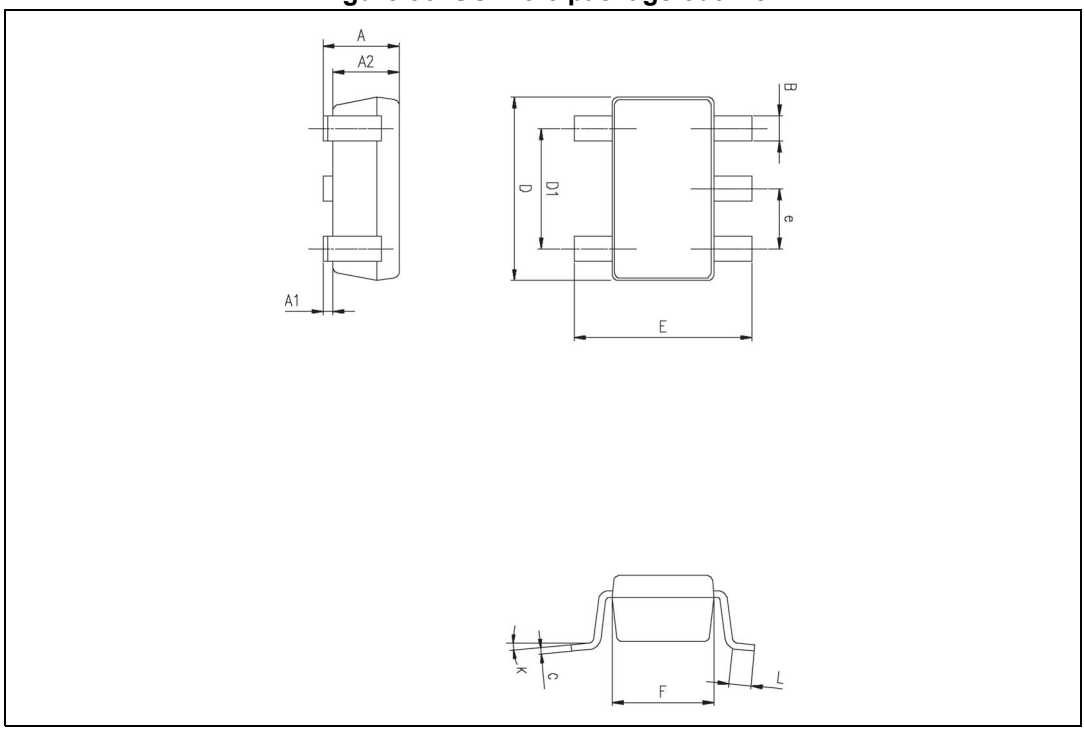

Table 8. SOT23-5 package mechanical data

Symbol	Dimensions					
	Millimeters			Inches		
	Min.	Typ.	Max.	Min.	Typ.	Max.
A	0.90	1.20	1.45	0.035	0.047	0.057
A1			0.15			0.006
A2	0.90	1.05	1.30	0.035	0.041	0.051
B	0.35	0.40	0.50	0.013	0.015	0.019
C	0.09	0.15	0.20	0.003	0.006	0.008
D	2.80	2.90	3.00	0.110	0.114	0.118
D1		1.90			0.075	
e		0.95			0.037	
E	2.60	2.80	3.00	0.102	0.110	0.118
F	1.50	1.60	1.75	0.059	0.063	0.069
L	0.10	0.35	0.60	0.004	0.013	0.023
K	0°		10°			

6.2 SO8 package information

Figure 37. SO8 package outline

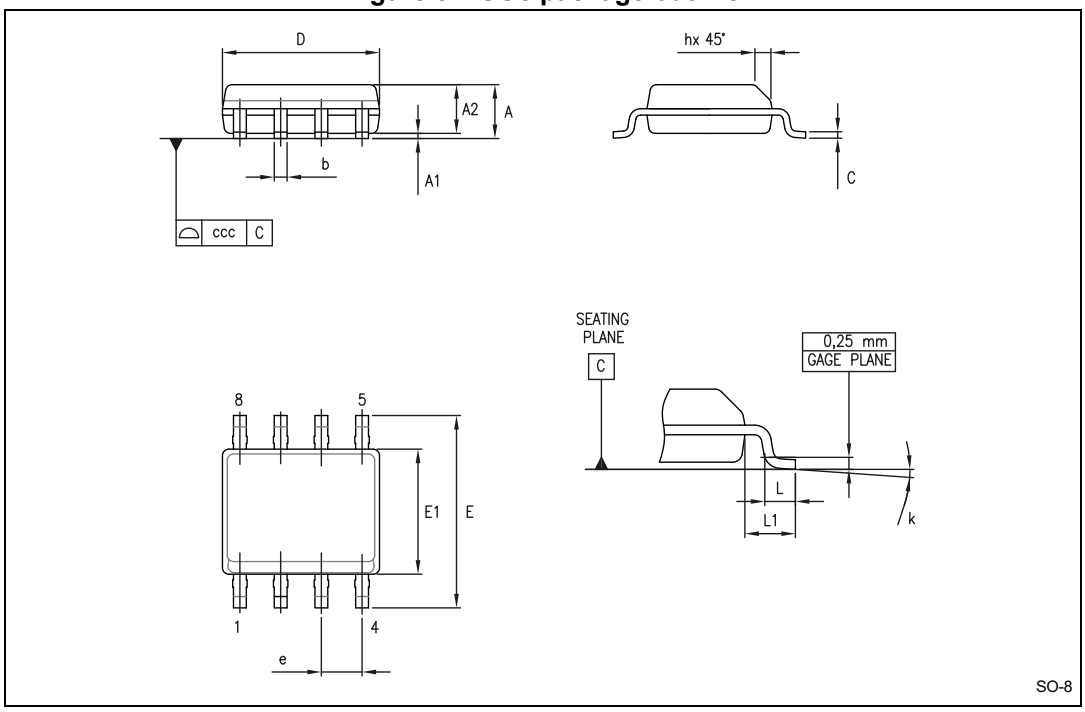

Table 9. SO8 package mechanical data

Symbol	Dimensions					
	Millimeters			Inches		
	Min.	Typ.	Max.	Min.	Typ.	Max.
A			1.75			0.069
A1	0.10		0.25	0.004		0.010
A2	1.25			0.049		
b	0.28		0.48	0.011		0.019
c	0.17		0.23	0.007		0.010
D	4.80	4.90	5.00	0.189	0.193	0.197
E	5.80	6.00	6.20	0.228	0.236	0.244
E1	3.80	3.90	4.00	0.150	0.154	0.157
e		1.27			0.050	
h	0.25		0.50	0.010		0.020
L	0.40		1.27	0.016		0.050
L1		1.04			0.040	
k	1°		8°	1°		8°
ccc			0.10			0.004

6.3 TSSOP8 package information

Figure 38. TSSOP8 package outline

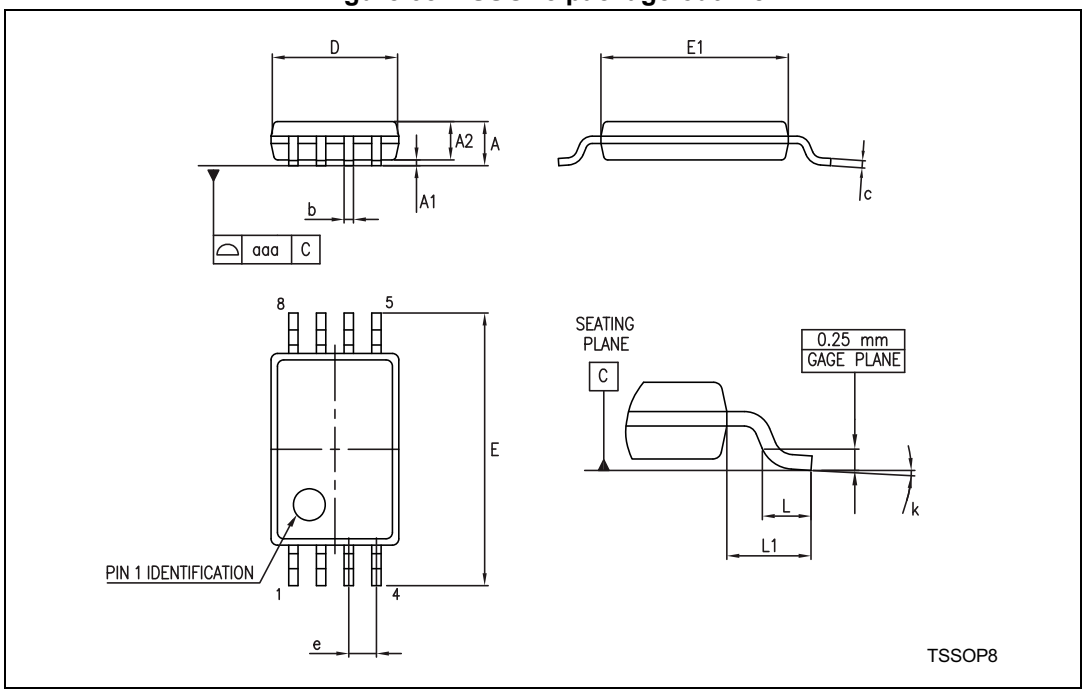

Table 10. TSSOP8 package mechanical data

Symbol	Dimensions					
	Millimeters			Inches		
	Min.	Typ.	Max.	Min.	Typ.	Max.
A			1.20			0.047
A1	0.05		0.15	0.002		0.006
A2	0.80	1.00	1.05	0.031	0.039	0.041
b	0.19		0.30	0.007		0.012
c	0.09		0.20	0.004		0.008
D	2.90	3.00	3.10	0.114	0.118	0.122
E	6.20	6.40	6.60	0.244	0.252	0.260
E1	4.30	4.40	4.50	0.169	0.173	0.177
e		0.65			0.0256	
k	0°		8°	0°		8°
L	0.45	0.60	0.75	0.018	0.024	0.030
L1		1			0.039	
aaa			0.10			0.004

6.4 TSSOP14 package information

Figure 39. TSSOP14 package outline

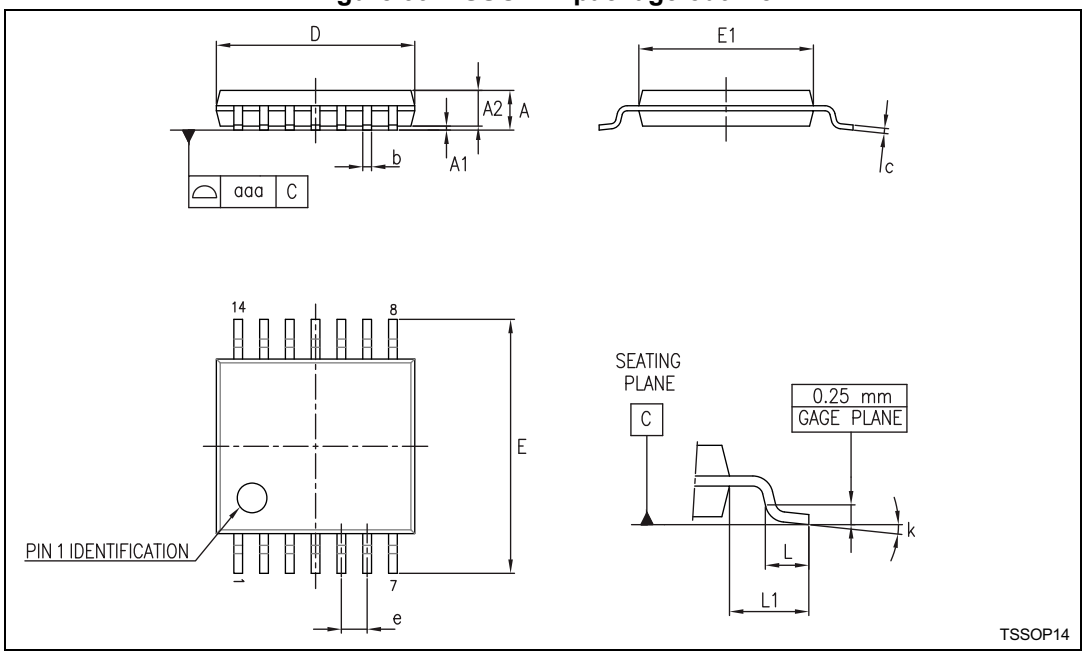

Table 11. TSSOP14 package mechanical data

Symbol	Dimensions					
	Millimeters			Inches		
	Min.	Typ.	Max.	Min.	Typ.	Max.
A			1.20			0.047
A1	0.05		0.15	0.002	0.004	0.006
A2	0.80	1.00	1.05	0.031	0.039	0.041
b	0.19		0.30	0.007		0.012
c	0.09		0.20	0.004		0.0089
D	4.90	5.00	5.10	0.193	0.197	0.201
E	6.20	6.40	6.60	0.244	0.252	0.260
E1	4.30	4.40	4.50	0.169	0.173	0.176
e		0.65			0.0256	
L	0.45	0.60	0.75	0.018	0.024	0.030
L1		1.00			0.039	
k	0°		8°	0°		8°
aaa			0.10			0.004

7 Ordering information

Table 12. Order codes

Type	Temperature range	Package	Packaging	Marking
TSH80ILT	-40 to +85 °C	SOT23-5	Tape and reel	K303
TSH80IYLT(1)		SOT23-5 (automotive grade level)		K310
TSH80IYDT(1)		SO8 (automotive grade level)		SH80IY
TSH81IPT		TSSOP8		SH81I
TSH82IDT		SO8	Tape and reel	TSH82I
TSH82IYDT(1)		SO8 (automotive grade level)	Tape and reel	TSH82IY
TSH82IPT		TSSOP8		SH82I
TSH84IPT		TSSOP14		SH84I

1. Qualified and characterized according to AEC Q100 and Q003 or equivalent, advanced screening according to AEC Q001 and Q002 or equivalent.

8 Revision history

Table 13. Document revision history

Date	Revision	Changes
1-Feb-2003	1	First release.
2-Aug-2005	2	PPAP references inserted in the datasheet, see *Table 12: Order codes on page 28*.
12-Apr-2007	3	Corrected temperature range for TSH80IYD/IYDT and TSH82IYD/IYDT order codes in *Table 12: Order codes on page 28*.
24-Oct-2007	4	TSH81IYPT PPAP references inserted in the datasheet, see *Table 12: Order codes on page 28*.
19-May-2009	5	Added data relating to the quad TSH84 device. Removed TSH81IYPT, TSH81IYD-IYDT, TSH82IYPT and TSH82IYD-IYDT order codes in *Table 12: Order codes*.
24-Jul-2012	6	Added TSSOP14 package to figure on page 1, updated titles of *Figure 2* to *Figure 31*, updated *Section 6: Package information*, removed TSH80ID-IDT, TSH80IYD, TSH81ID-IDT and TSH82ID order codes from *Table 12: Order codes*. Modified note 1 below *Table 12: Order codes*, minor corrections throughout document.
13-Sep-2012	7	Updated TSH80IYLT order code (status qualified) in *Table 12*. Removed TSH80IYD, TSH80IYDT, TSH80ID/DT, TSH81ID/DT, and TSH82ID order code from *Table 12*. Replaced TSH82DT by TSH82IDT order code in *Table 12*. Minor corrections throughout document.
30-Apr-2013	8	Updated *Features*: added automotive qualification *Figure 1: Pin connections for each package (top view)*: updated pin connections of SO8/TSSOP8 packages for TSH81 device. Replaced *Figure 36: SOT23-5 package outline* *Table 12: Order codes*: added automotive order code TSH82IYDT
03-Jul-2014	9	Updated CDM to 1.5 kV in *Table 1: Absolute maximum ratings* *Table 12: Order codes*: added automotive order code TSH80IYDT and removed shipping option in tubes from TSH82IDT

Please Read Carefully:

Information in this document is provided solely in connection with ST products. STMicroelectronics NV and its subsidiaries (“ST”) reserve the right to make changes, corrections, modifications or improvements, to this document, and the products and services described herein at any time, without notice.

All ST products are sold pursuant to ST’s terms and conditions of sale.

Purchasers are solely responsible for the choice, selection and use of the ST products and services described herein, and ST assumes no liability whatsoever relating to the choice, selection or use of the ST products and services described herein.

No license, express or implied, by estoppel or otherwise, to any intellectual property rights is granted under this document. If any part of this document refers to any third party products or services it shall not be deemed a license grant by ST for the use of such third party products or services, or any intellectual property contained therein or considered as a warranty covering the use in any manner whatsoever of such third party products or services or any intellectual property contained therein.

UNLESS OTHERWISE SET FORTH IN ST’S TERMS AND CONDITIONS OF SALE ST DISCLAIMS ANY EXPRESS OR IMPLIED WARRANTY WITH RESPECT TO THE USE AND/OR SALE OF ST PRODUCTS INCLUDING WITHOUT LIMITATION IMPLIED WARRANTIES OF MERCHANTABILITY, FITNESS FOR A PARTICULAR PURPOSE (AND THEIR EQUIVALENTS UNDER THE LAWS OF ANY JURISDICTION), OR INFRINGEMENT OF ANY PATENT, COPYRIGHT OR OTHER INTELLECTUAL PROPERTY RIGHT.

ST PRODUCTS ARE NOT DESIGNED OR AUTHORIZED FOR USE IN: (A) SAFETY CRITICAL APPLICATIONS SUCH AS LIFE SUPPORTING, ACTIVE IMPLANTED DEVICES OR SYSTEMS WITH PRODUCT FUNCTIONAL SAFETY REQUIREMENTS; (B) AERONAUTIC APPLICATIONS; (C) AUTOMOTIVE APPLICATIONS OR ENVIRONMENTS, AND/OR (D) AEROSPACE APPLICATIONS OR ENVIRONMENTS. WHERE ST PRODUCTS ARE NOT DESIGNED FOR SUCH USE, THE PURCHASER SHALL USE PRODUCTS AT PURCHASER’S SOLE RISK, EVEN IF ST HAS BEEN INFORMED IN WRITING OF SUCH USAGE, UNLESS A PRODUCT IS EXPRESSLY DESIGNATED BY ST AS BEING INTENDED FOR “AUTOMOTIVE, AUTOMOTIVE SAFETY OR MEDICAL” INDUSTRY DOMAINS ACCORDING TO ST PRODUCT DESIGN SPECIFICATIONS. PRODUCTS FORMALLY ESCC, QML OR JAN QUALIFIED ARE DEEMED SUITABLE FOR USE IN AEROSPACE BY THE CORRESPONDING GOVERNMENTAL AGENCY.

Resale of ST products with provisions different from the statements and/or technical features set forth in this document shall immediately void any warranty granted by ST for the ST product or service described herein and shall not create or extend in any manner whatsoever, any liability of ST.

ST and the ST logo are trademarks or registered trademarks of ST in various countries.
Information in this document supersedes and replaces all information previously supplied.
The ST logo is a registered trademark of STMicroelectronics. All other names are the property of their respective owners.

© 2014 STMicroelectronics - All rights reserved

STMicroelectronics group of companies

Australia - Belgium - Brazil - Canada - China - Czech Republic - Finland - France - Germany - Hong Kong - India - Israel - Italy - Japan - Malaysia - Malta - Morocco - Philippines - Singapore - Spain - Sweden - Switzerland - United Kingdom - United States of America

www.st.com